GT 50/2/152 C.165-170

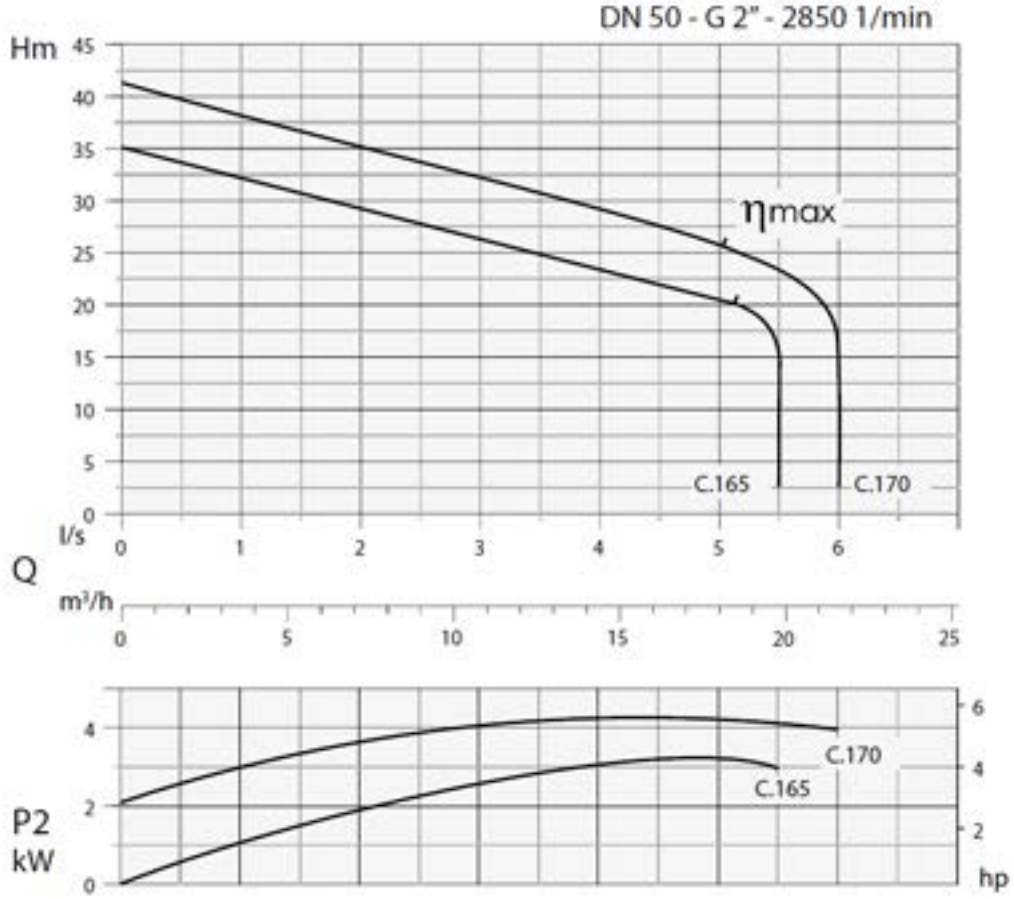

Impeller GRINDER

Free passage Ø 8 mm

Specifications

Type		Q	l/s	0,5	1	1,5	2	2,5	3	3,5	4	5	6
			l/m	30	60	90	120	150	180	210	240	300	360
			m³/h	1,8	3,6	5,4	7,2	9	10,8	12,6	14,4	18,0	21,6
GT 50/2/152 C. 165	-EX	H m		34	32,5	31	29	28	26,5	25	24	20	
GT 50/2/152 C. 170	-EX	H m		40	38	37	35	33,5	32,5	31,5	29	25,5	2,5

Type		Delivery	kW			R.p.m.	Poles	A	Hz	cos φ
			P1	P2	Hp	1/min		400V 3 ~		
GT 50/2/152 C. 165	-EX	Dn 50 - G2"	4,5	3,2	4,5	2850	2	7	50	0,85
GT 50/2/152 C. 170	-EX	Dn 50 - G2"	5,6	4,2	6	2850	2	9,5	50	0,87

-EX code indicates pump with explosion proof ATEX II 2 G Ex db c IIB T4 X, available on request.

Applications

Submersible electric motor pump for high head operations provided with grinder. For pumping of domestic dirty waters, waters with solids and excrements.

Motor

Asynchronous electric 2 poles motor with squirrel-cage rotor.
Stator Insulation: F = 155 °C
Protection class: IP 68

Seals

Seal type applied to the motor side: Carbon/Ceramic Ø25
Seal type applied to the wet end side: Silicon-Carbide+Viton Ø25

Directives, Norms, Tolerances

Curves as per ISO 9906, Grade 2
Ex II 2 G Ex d c IIB T4 X

GT 50/2/152 C.165-170

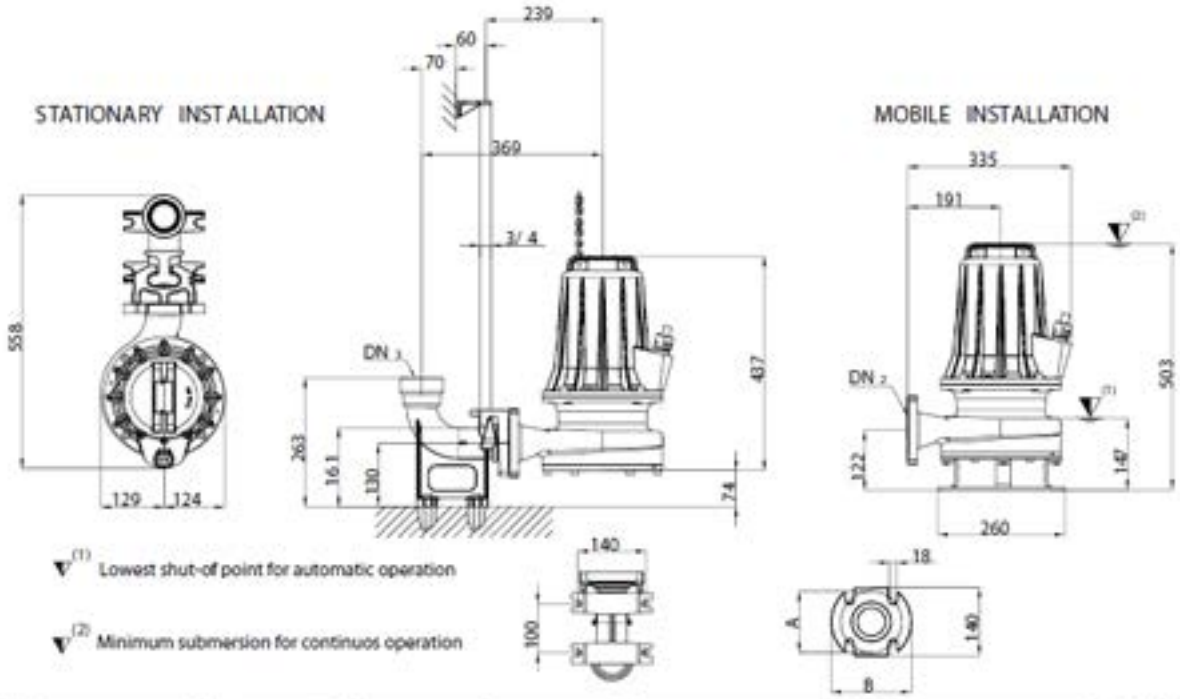

TYPE	DN2/3	DN2	A	B	HOLES N°	HOLES Ø	OPTIONAL	
GT 50/2/152 C. 165 GT 50/2/152 C. 170	2" / 2"½	50 (G2")	125	165	4	18	P2 DN 65	DUTY 50

TYPE	CABLE		SENSOR		SEALS		BEARINGS	
	3 ~ 400 V	MT		SI				
GT 50/2/152 C. 165 GT 50/2/152 C. 170	(1) (2) D.O.L. / With free terminals	10	Thermal probe	YES				
			Conductivity probe	SI YES	SUP./UPPER AR 25	INF./LOWER MG1525-G26	SUP./UPPER 6205 2Z	INF./LOWER 3205 2Z

(1) Versione standard - *Standard version:* 4x1,5 + 3x0,50 - Ø 15 (H07RN8F)
(2) Versione Atex - *Atex version:* 7x1,5+3x0,50 - Ø 17 (NSSHÖU-J)

Spare parts	Description	Materials
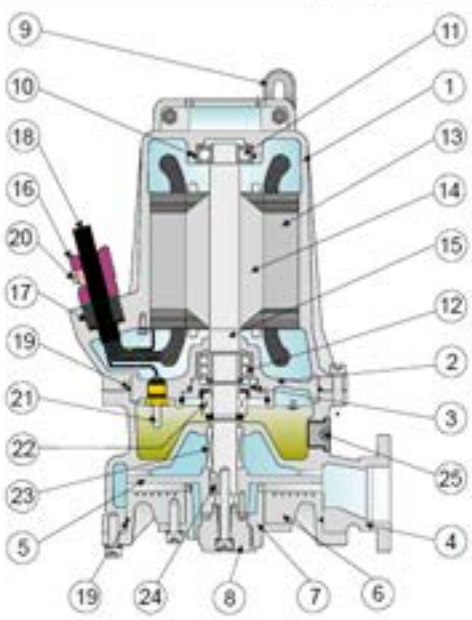	1 Motor casing 2 Bearing support 3 Bearing locking ring 4 Pump casing 5 Motor support 6 Impeller 7 Chain ring 8 O' Ring 9 Upper ball bearing 10 Lower ball bearing 11 Stator 12 Rotor 13 Motor shaft 14 Cable clamp 15 Locking ring 16 Net supply cable 17 O' Ring 18 O' Ring 19 Conductivity seal sensor 20 Upper mech. seal 21 Lower mech. seal 22 Key 23 Oil plug Bolts	Cast iron G25 Stainless steel Aisi 416 Stainless steel Aisi 416 Nitrilic rubber Stainless steel Aisi 420 Cast iron G25 Nitrilic rubber H07RN8F (NSSHÖU-J solo - only ATEX) Nitrilic rubber Carbon/Ceramic Silicon carbide + viton Stainless steel Aisi 304 Stainless steel Aisi 416 Stainless steel Aisi 304

TYPE	X	Y	Z	Kg
GT 50/2/152 C. 165	355	580	420	61
GT 50/2/152 C. 170	355	580	420	62

GT 50/2/173 C. 175-180-185

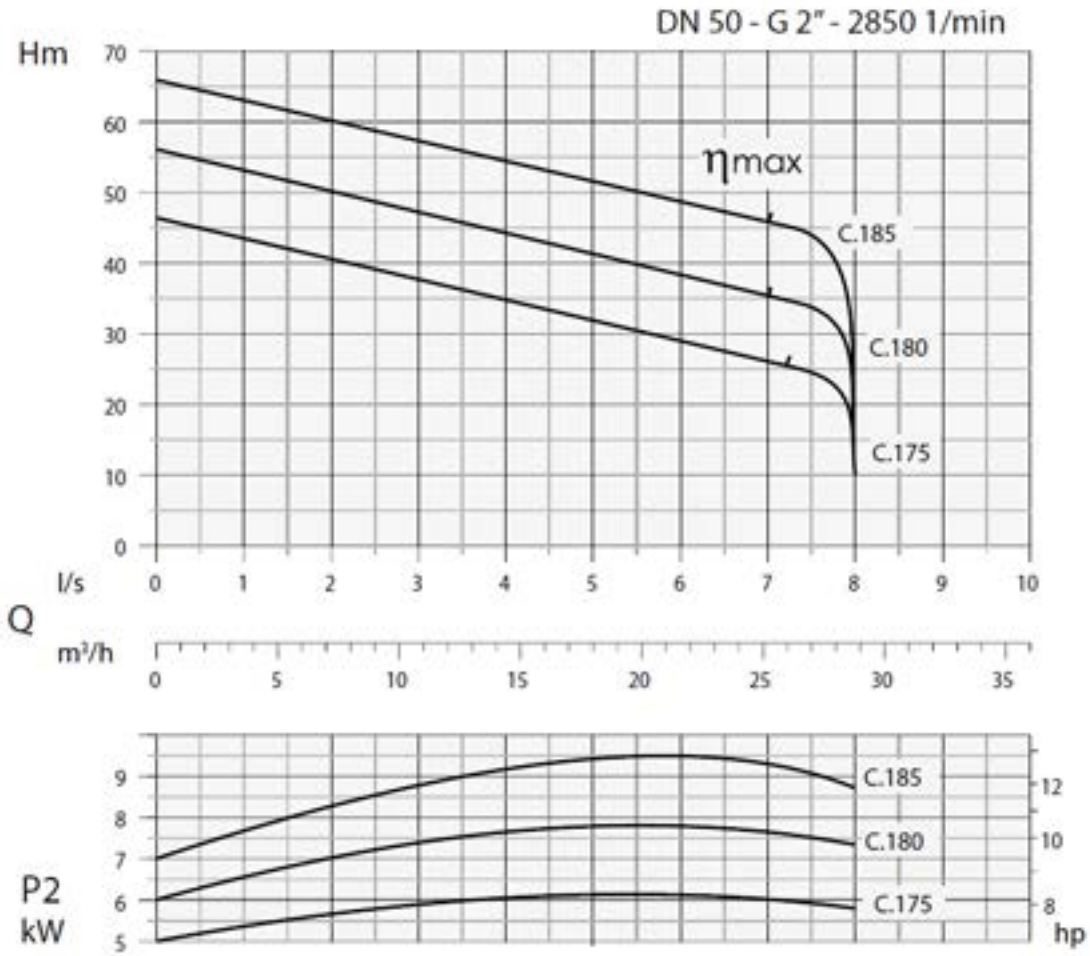

Impeller GRINDER

Free passage Ø 10 mm

Specifications

Type		Q	l/s	0,5	1	2	3	4	5	6	7	7,5	8
			l/m	30	60	120	180	240	300	360	420	450	480
			m³/h	1,8	3,6	7,2	10,8	14,4	18,0	21,6	25,2	27,0	28,8
GT 50/2/173 C. 175	-EX	H m		45	43	41	37,5	35	32	28	26	25	10
GT 50/2/173 C. 180	-EX			55	52,5	50	47,5	45	41	38	35	34	20
GT 50/2/173 C. 185	-EX			65	62,5	60	57,5	55	52	48	46	44	30

Tipo - Type		Mandata Delivery	kW			R.p.m.	Poli Poles	A	Hz	cos
			P1	P2	Hp	1/min		400V 3 ~		
GT 50/2/173 C. 175	-EX	Dn 50 - G2"	8,2	6,2	8,5	2850	2	13,7	50	0,88
GT 50/2/173 C. 180	-EX		9,7	7,8	10,5	2850	2	16,2	50	0,89
GT 50/2/173 C. 185	-EX		11,6	9,5	13	2850	2	20	50	0,87

La sigla -EX sta indicare pompa con Certificazione ATEX II 2 G Ex db c IIB T4 X, disponibile su richiesta.
-EX code indicates pump with explosion proof ATEX II 2 G Ex db c IIB T4 X, available on request.

Seals

Seal type applied to the motor side: Carbon/Ceramic Ø30
Seal type applied to the wet end side: Silicon-Carbide+Viton Ø30

Directives, Norms, Tolerances

Curves as per ISO 9906, Grade 2
Ex II 2 G Ex d c IIB T4 X

Applications

Submersible electric motor pump for high head operations provided with grinder. For pumping of domestic dirty waters, waters with solids and excrements.

Motor

Asynchronous electric 2 poles motor with squirrel-cage rotor.
Stator Insulation: F = 155 °C
Protection class: IP 68

GT 50/2/173 C. 175-180-185

STATIONARY INSTALLATION

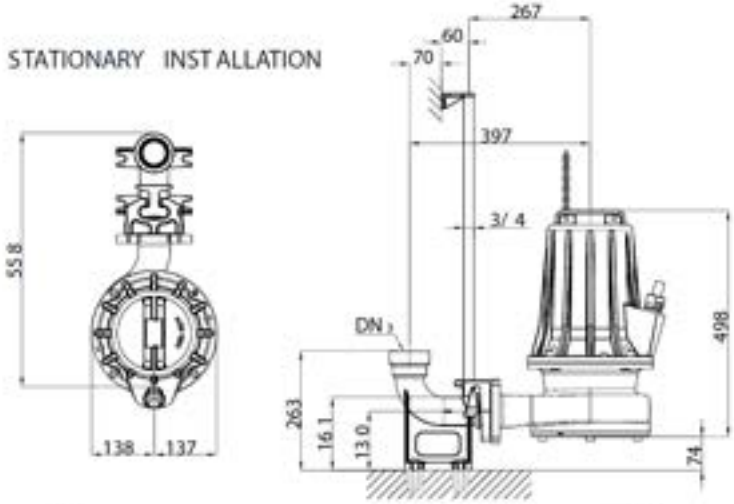

MOBILE INSTALLATION

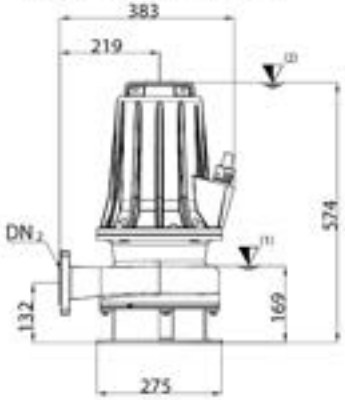

(1) Lowest shut-of point for automatic operation

(2) Minimum submersion for continuos operation

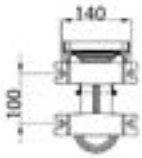

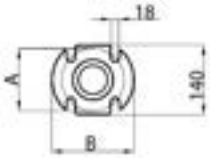

TYPE	DN2/3	DN2	A	B	HOLES N°	HOLES Ø	OPTIONAL	
GT 50/2/173 C. 175 GT 50/2/173 C. 180 GT 50/2/173 C. 185	2" / 2"1/2	50 (G2")	125	140	4	18	P3 DN 65	DUTY 50

TYPE	CABLE		SENSOR		SEALS		BEARINGS	
	3 ~ 400 V	MT		SI YES				
GT 50/2/173 C. 175 GT 50/2/173 C. 180 GT 50/2/173 C. 185	(1) (2) Y-Δ Starting / With free terminals	10	Thermal probe					
			Conductivity probe	SI YES	SUP./UPPER	INF./LOWER	SUP./UPPER	INF./LOWER
					AR 30	MG1530-G26	6206 2Z	3306 2Z

(1) Versione standard - *Standard version:* 7x1,5+3x0,50 - Ø 17 (H07RN8F)
(2) Versione Atex - *Atex version:* 7x1,5+3x0,50 - Ø 17 (NSSHÖU-J)

Spare parts

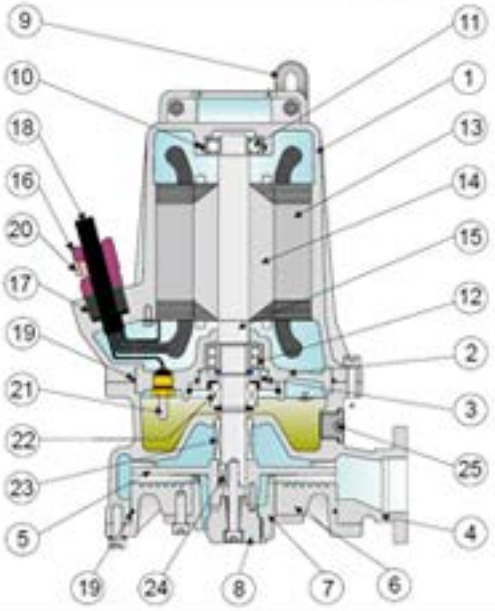

Description	Materials
1 Motor casing	
2 Bearing support	
3 Bearing locking ring	Cast iron G25
4 Pump casing	
5 Impeller	
6 Closing cover	
7 Fixed cutting part	Stainless steel Aisi 416
8 Rotating cutting part	
9 Chain ring	Stainless steel Aisi 416
10 O' Ring	Nitrilic rubber
11 Upper ball bearing	
12 Lower ball bearing	
13 Stator	
14 Rotor	
15 Motor shaft	Stainless steel Aisi 420
16 Cable Clamp	Cast iron G25
17 Cable Grommet	Nitrilic rubber
18 Net supply cable	H07RN8F (NSSHÖU-J solo - only ATEX)
19 O' Ring	Nitrilic rubber
20 Cable gland tab	
21 Conductivity seal sensor	
22 Upper mech. seal	Carbon/Ceramic
23 Lower mech. seal	Silicon carbide + viton
24 Key	Stainless steel Aisi 304
25 Oil plug	Stainless steel Aisi 416
Bolts	Stainless steel Aisi 304

TIPO - TYPE	X	Y	Z	Kg
GT 50/2/173 C. 175	355	580	420	85
GT 50/2/173 C. 180	355	580	420	86
GT 50/2/173 C. 185	355	580	420	90